E2 Optical Kit Encoder (Default)

RELEASE DATE: 7/24/2025

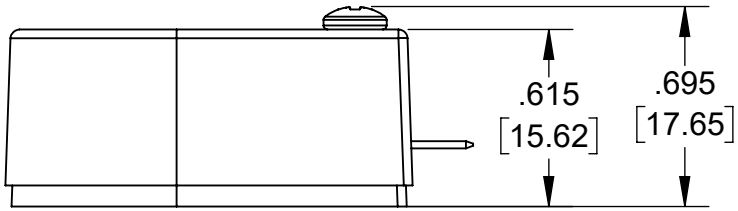

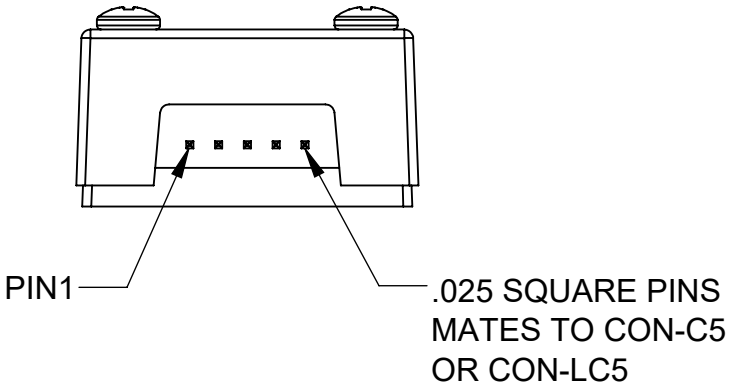

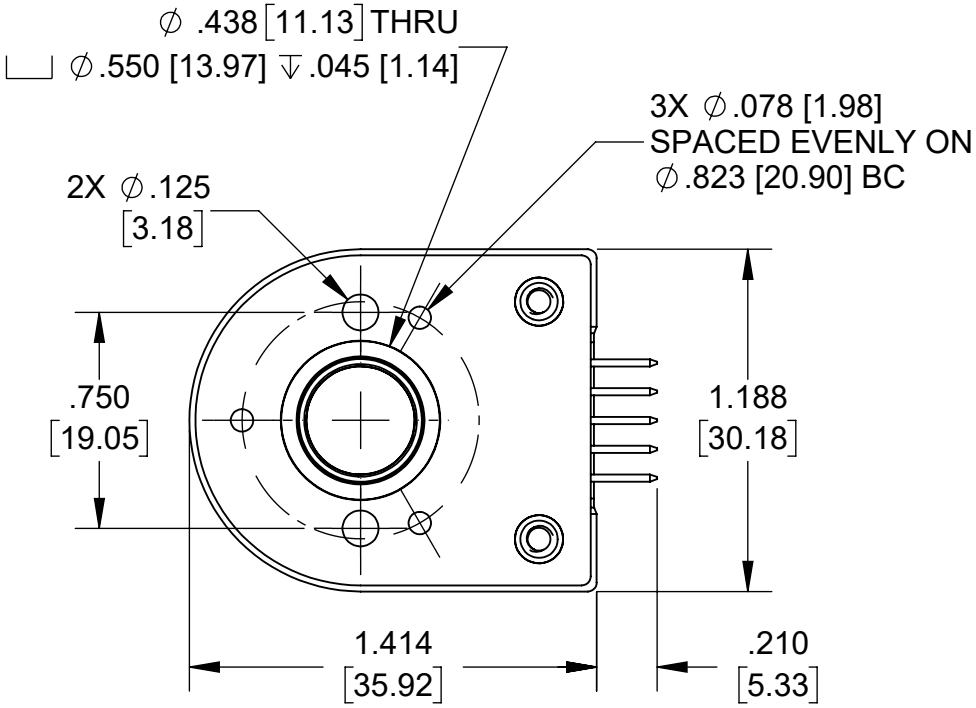

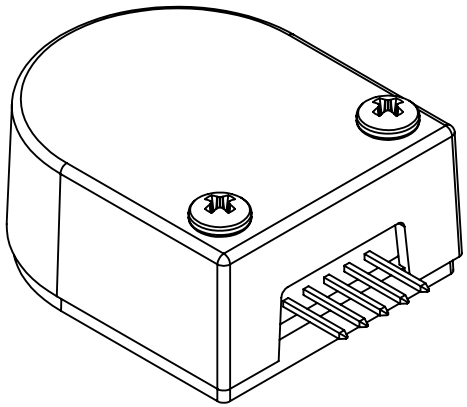

US DIGITAL
1400 NE 136th Avenue
Vancouver, Washington 98684, USA
info@usdigital.com
www.usdigital.com
Local: 360.260.2468
Toll-free: 800.736.0194

UNITS: INCHES [MM]
METRIC SHOWN FOR REFERENCE ONLY