EM2 Features

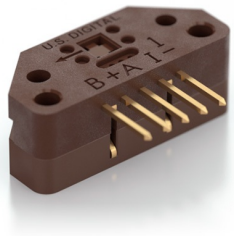

- Two-channel quadrature with index
- High-resolution version of EM1
- Single 5V supply
- Rotary versions up to 10,000 CPR
- Linear versions up to 2,000 CPI
- Internal decoupling capacitor
- Outputs source/sink 5 mA

EM2 Product Description

The EM2 is a transmissive optical encoder module designed to provide up to 4x higher resolution than the EM1. The module detects rotary or linear movement when paired with an encoder disk or linear strip. The EM2 consists of a lensed LED source and a monolithic detector IC enclosed in a small polymer package identical to the EM1. The EM2 uses phased array detector technology allowing for a wider gap tolerance and excellent tolerance to some disk contamination.

The EM2 provides digital A & B quadrature outputs with a third output index channel. Each EM2 module is resolution-specific and is matched to the resolution of an encoder disk. The EM2 operates with a single 5V supply and provides single-ended outputs capable of sinking and sourcing 5mA. An internal 0.1 µF decoupling capacitor is designed into the EM2 to provide enhanced noise immunity.

For open collector and higher voltage applications, add the PC3 *(https://www.usdigital.com/products/accessories/interfaces/cable-drivers/pc3/)* cable driver, or for differential cable driver outputs, add the PC4 *(https://www.usdigital.com/products/accessories/interfaces/cable-drivers/pc4/)* cable driver. Encoder disks, quadrature decoder chips, counter chips, computer interface boards, mating connectors, and cables are also available.

Download *(https://www.usdigital.com/media/4tvlnrwp/em2-em1-comparison.pdf)* the EM2/EM1 comparison chart.

Mechanical Drawings

EM2 Transmissive Optical Encoder Module

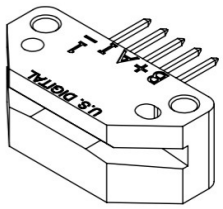

RELEASE DATE: 02/07/2022

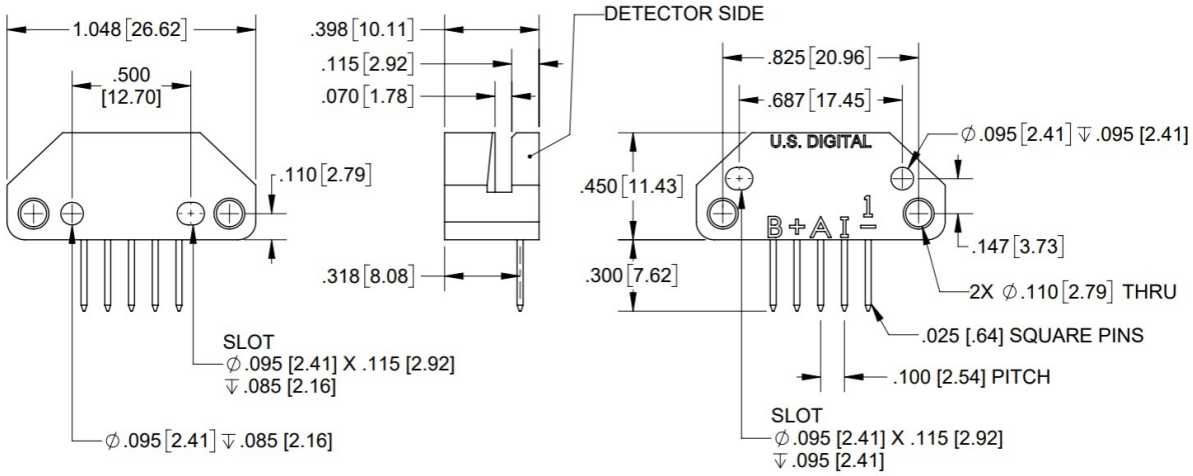

US DIGITAL
1400 NE 136th Avenue
Vancouver, Washington 98684, USA
info@usdigital.com
www.usdigital.com
Local: 360.260.2468
Toll-free: 800.736.0194

UNITS: INCHES [MM]
METRIC SHOWN FOR REFERENCE ONLY

EM2 Transmissive Optical Encoder Module
Linear Strip Alignment

RELEASE DATE: 04/07/2015

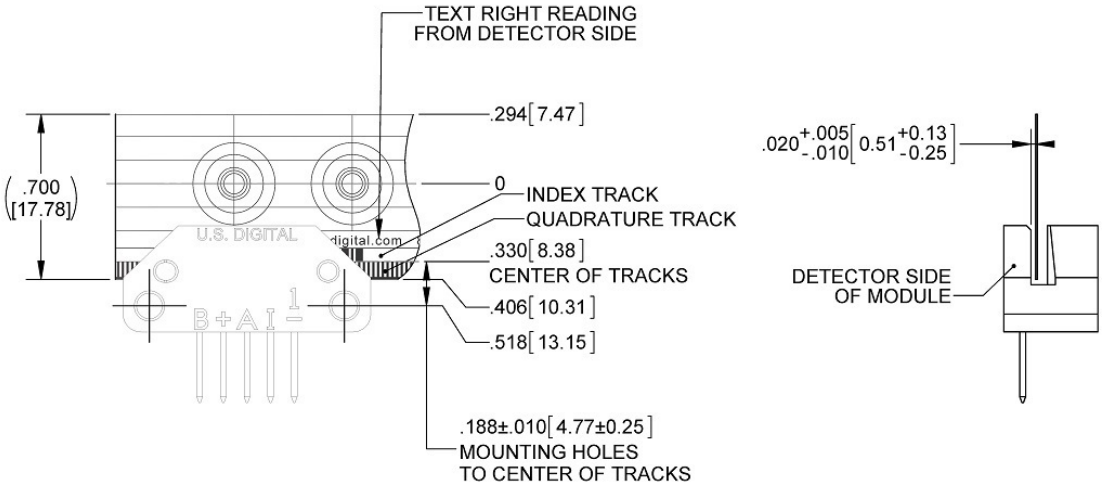

US DIGITAL
1400 NE 136th Avenue
Vancouver, Washington 98684, USA
info@usdigital.com
www.usdigital.com
Local: 360.260.2468
Toll-free: 800.736.0194

UNITS: INCHES [MM]
METRIC SHOWN FOR REFERENCE ONLY

EM2 Transmissive Optical Encoder Module
Disk Alignment

RELEASE DATE: 1/3/2024

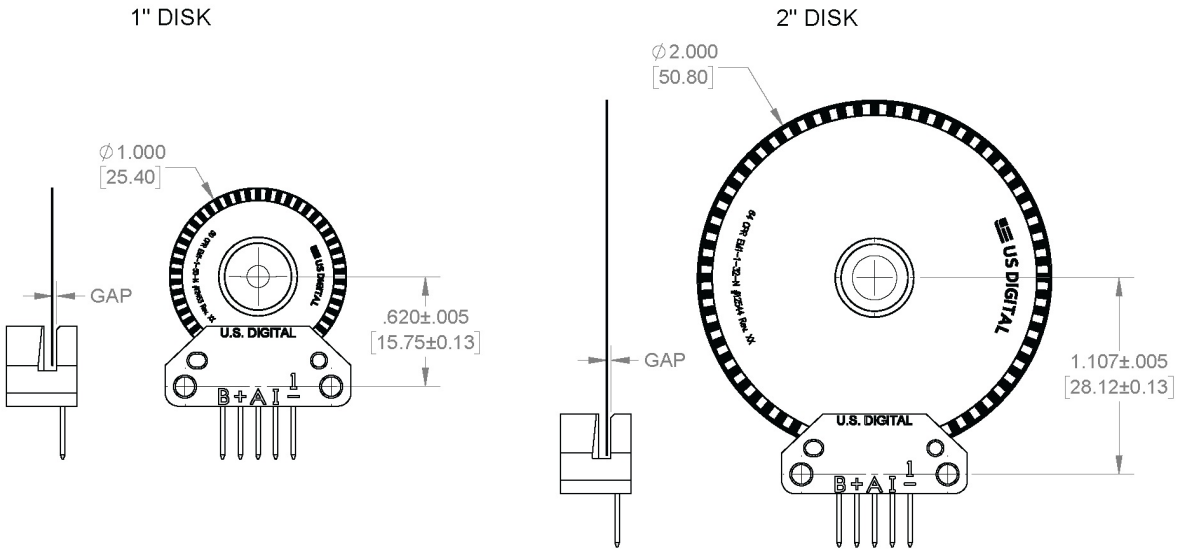

RECOMMENDED DISK GAP: $.020^{+.005}_{-.010}$ $[0.51^{+0.13}_{-0.25}]$

US DIGITAL
1400 NE 136th Avenue
Vancouver, Washington 98684, USA
info@usdigital.com
www.usdigital.com
Local: 360.260.2468
Toll-free: 800.736.0194

UNITS: INCHES [MM]
METRIC SHOWN FOR REFERENCE ONLY

Specifications

COMPATIBLE 1" & 2" DISKS

		1" DISKS
CPR	**MODULE Index**	**1" DISK Index**
2000	EM2-1-2000-I	DISK-1-2000-*-IE
2048	EM2-1-2048-I	DISK-1-2048-*-IE
2500	EM2-1-2500-I	DISK-1-2500-*-IE
4000	EM2-1-4000-I	DISK-1-4000-*-IE
4096	EM2-1-4096-I	DISK-1-4096-*-IE
5000	EM2-1-5000-I	DISK-1-5000-*-IE
	*Represents the bore size	

		2" DISKS
CPR	**MODULE Index**	**2" DISK Index**
3600	EM2-2-3600-I	DISK-2-3600-*-IE
4000	EM2-2-4000-I	DISK-2-4000-*-IE
4096	EM2-2-4096-I	DISK-2-4096-*-IE
5000	EM2-2-5000-I	DISK-2-5000-*-IE
7200	EM2-2-7200-I	DISK-2-7200-*-IE
8000	EM2-2-8000-I	DISK-2-8000-*-IE
8192	EM2-2-8192-I	DISK-2-8192-*-IE
10000	EM2-2-10000-I	DISK-2-10000-*-IE
	*Represents the bore size	

COMPATIBLE 1" & 2" HUBDISKS

	1" HUBDISKS	
CPR	**MODULE Index**	**1" HUBDISK Index**
2000	EM2-1-2000-I	HUBDISK-1-2000-*-IE
2048	EM2-1-2048-I	HUBDISK-1-2048-*-IE
2500	EM2-1-2500-I	HUBDISK-1-2500-*-IE
4000	EM2-1-4000-I	HUBDISK-1-4000-*-IE
4096	EM2-1-4096-I	HUBDISK-1-4096-*-IE
5000	EM2-1-5000-I	HUBDISK-1-5000-*-IE
	*Represents the bore size	
	2" HUBDISKS	
CPR	**MODULE Index**	**2" HUBDISK Index**
3600	EM2-2-3600-I	HUBDISK-2-3600-*-IE
4000	EM2-2-4000-I	HUBDISK-2-4000-*-IE
4096	EM2-2-4096-I	HUBDISK-2-4096-*-IE
5000	EM2-2-5000-I	HUBDISK-2-5000-*-IE
7200	EM2-2-7200-I	HUBDISK-2-7200-*-IE
8000	EM2-2-8000-I	HUBDISK-2-8000-*-IE
8192	EM2-2-8192-I	HUBDISK-2-8192-*-IE
10000	EM2-2-10000-I	HUBDISK-2-10000-*-IE
	*Represents the bore size	

COMPATIBLE LINEAR STRIPS

LPI	MODULE Non-Index	Linear Strip Non-Index	MODULE Index	Linear Strip Index
1000	EM2-0-1000-N	LIN-1000-*-N	EM2-0-1000-I	LIN-1000-*-#
2000	EM2-0-2000-N	LIN-2000-*-N	EM2-0-2000-I	LIN-2000-*-#
	* Represents length of Linear Strip		* Represents length of Linear Strip # Represents location of Index	

ENVIRONMENTAL

Parameter	Value	Units
Operating Temperature	-25 to 100	C
Electrostatic Discharge, IEC 61000-4-2	± 4	kV
Vibration (10Hz to 2kHz, sinusoidal)	20	G
Shock (6 milliseconds, half-sine)	75	G

OPERATING CONDITIONS

PARAMETER	MIN.	MAX.	UNITS	NOTES
A/B Output Frequency	0	360	kHz	2000, 2048, 2500 CPR (1") 3600, 4000, 4096, 5000 CPR (2") 1000 CPI (Linear)
	0	720	kHz	4000, 4096, 5000 CPR (1") 7200, 8000, 8192, 10000 CPR (2") 2000 CPI (Linear)
Disk RPM	0	(21.6 x 10^6) / CPR	RPM	2000, 2048, 2500 CPR (1") 3600, 4000, 4096, 5000 CPR (2")
	0	(43.2 x 10^6) / CPR	RPM	4000, 4096, 5000 CPR (1") 7200, 8000, 8192, 10000 CPR (2")
Linear Strip Speed	0	360	in./sec.	1000, 2000 CPI (Linear)
Disk/Linear Strip Radial Position Tolerance	± .005		inch	

ELECTRICAL SPECIFICATIONS

- Specifications apply over the entire operating temperature/voltage range.
- Typical values are specified at Vcc = 5.0V and 25C.

PARAMETER	MIN.	TYP.	MAX.	UNITS	CONDITIONS
Supply Voltage	4.5	5.0	5.5	V	Ripple < 100 mVpp
Supply Current		72	85	mA	no load
Low-level Output			0.5	V	I_{OL} = 5 mA
		0.25		V	no load
High-level Output	2.0			V	I_{OH} = -5 mA
		4.0		V	no load
Output Current Per Channel	-5		5	mA	
Load Capacitance			100	pF	
Output Rise Time		50		nS	± 5 mA load
Output Fall Time		50		nS	± 5 mA load

TIMING CHARACTERISTICS

ENCODING CHARACTERISTICS:

- Specifications apply over the entire operating temperature/voltage range.
- Values are for the worst error over full rotation.
- Refer to the timing diagram below.

PARAMETER	SYMBOL	MIN.	TYP.	MAX.	UNITS
Symmetry	X, Y	108	190	252	°e *(https://www.usdigital.com/support/resources/glossary/#glossary_e)*
Quadrature	Z	45	90	135	°e *(https://www.usdigital.com/support/resources/glossary/#glossary_e)*
Index Pulse Width	Po	40	90	135	°e *(https://www.usdigital.com/support/resources/glossary/#glossary_e)*
Ch. I Rise After Ch. B or Ch. A Fall	t1		-40		ns
Ch. I Fall After Ch. B or Ch. A Rise	t2		25		ns

TIMING DIAGRAM:

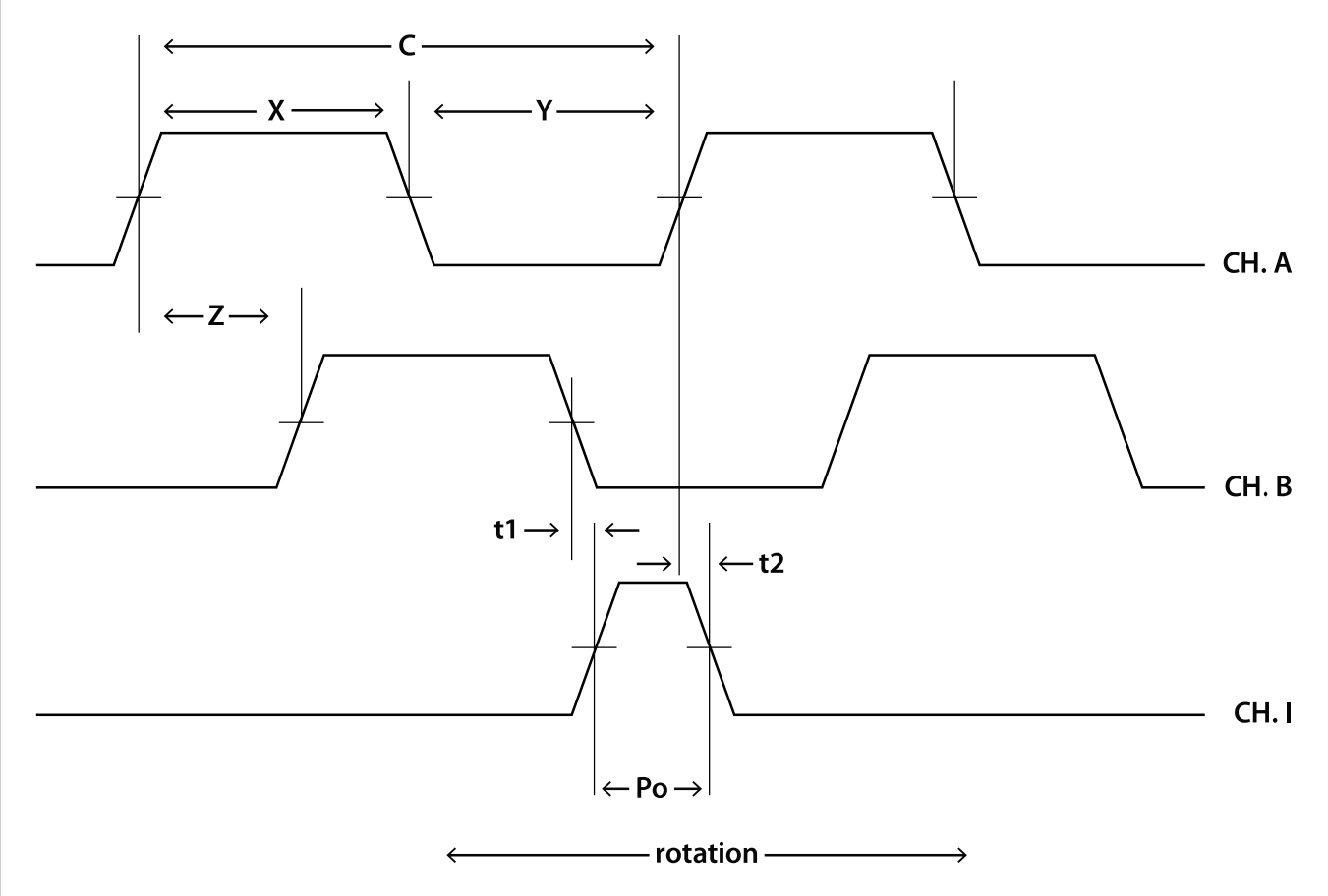

CPI: The number of Cycles (C) of the A or B output Per Inch of linear strip movement.

CPR: The number of Cycles (C) of the A or B outputs Per Revolution.

Index (I): The index output goes high once per revolution, coincident with the low states of channels A and B, nominally 1/4 of one cycle (90 °e).

One Shaft Rotation: 360 mechanical degrees.

One Electrical Degree (°e): 1/360th of one cycle.

One Cycle: 360 electrical degrees (°e). Each cycle can be decoded into 1 or 4 states, referred to as X1 or X4 resolution multiplication.

PPR: The number of resolvable Positions Per Revolution of the encoder disk with x4 quadrature decoding.

Quadrature (Z): The phase lag or lead between channels A and B in electrical degrees, nominally 90 °e.

Symmetry: A measure of the relationship between (X) and (Y) in electrical degrees, nominally 180 °e.

INSTALLATION TORQUE

PARAMETER	TORQUE
Mounting Screws	3.5-4 in-lbs

PIN-OUTS

Pin	Description
1	Ground
2	Index
3	A channel
4	+5VDC power
5	B channel

Notes

- US Digital® warrants its products against defects in materials and workmanship for two years. See complete warranty *(https://www.usdigital.com/company/warranty)* for details.

Configuration Options

EM2	-	Type	-	Resolution	-	Index
		0 (*Linear Strip*)		1000 LPI		I (*Index*)
		1 (*1" Disk*)		2000 LPI		N (*Non-Index*)
		2 (*2" Disk*)		2000 CPR		
				2048 CPR		
				2500 CPR		
				4000 CPR		
				4096 CPR		
				5000 CPR		
				3600 CPR		
				4000 CPR		
				4096 CPR		
				5000 CPR		
				7200 CPR		
				8000 CPR		
				8192 CPR		
				10000 CPR		

PLEASE NOTE: This chart is for informational use only. Certain product configuration combinations are not available. Visit the EM2 product page *(https://www.usdigital.com/products/EM2)* for pricing and additional information.