PC3-FC5 Encoder Open Collector Cable Driver

RELEASE DATE: 02/04/2019

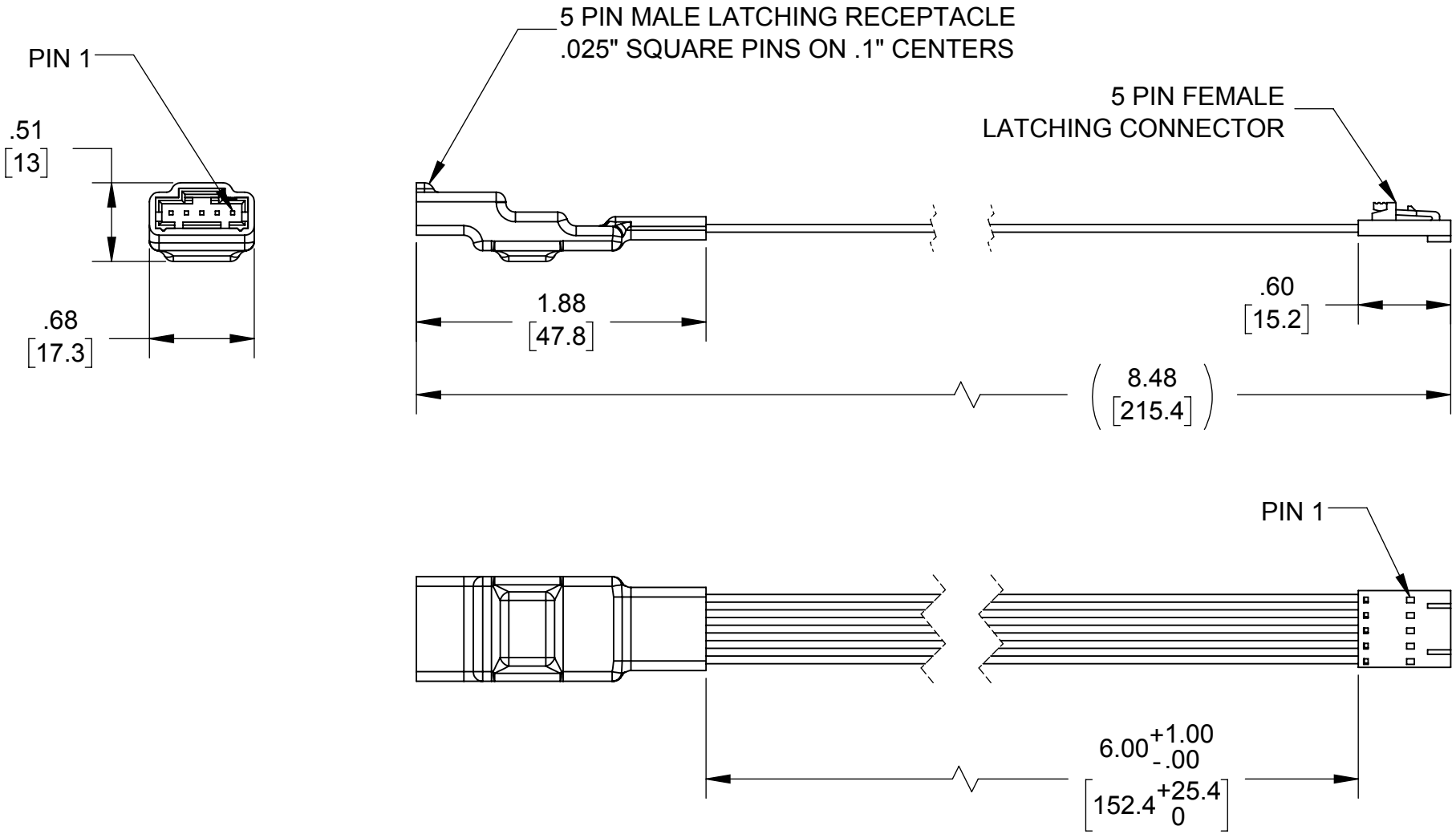

US DIGITAL

1400 NE 136th Avenue
Vancouver, Washington 98684, USA

info@usdigital.com
www.usdigital.com

Local: 360.260.2468
Toll-free: 800.736.0194

UNITS: INCHES [MM]
METRIC SHOWN FOR REFERENCE ONLY