H3 Features

- Ball-bearing option tracks to 10,000 RPM
- 2-channel quadrature, TTL squarewave outputs
- 3rd channel index option available on some resolutions
- 64 to 10,000 cycles per revolution (CPR)
- 256 to 40,000 pulses per revolution (PPR)
- Wide operating temperature
- Single +5VDC supply

H3 Product Description

The H3 series ball-bearing optical shaft encoder has a glass-filled polymer enclosure. This non-contacting rotary to digital converter is designed to provide digital feedback information. The H3 is fully assembled with a brass shaft, two 1/4 in. ID by 1/2 in. OD ball bearings and a mounting plate. The mounting plate comes with 4 mounting holes for #2 - #4 size screws.

The H3 is designed to drive cables up to 10 feet long. For longer cable lengths, adding a PC4 *(https://www.usdigital.com/products/accessories/interfaces/cable-drivers/pc4/)*/PC5 *(https://www.usdigital.com/products/accessories/interfaces/cable-drivers/pc5/)* differential line driver is recommended. A connection to the H3 series encoder is made through a 5-pin standard connector. The mating connectors are available from US Digital with several cable options and lengths.

Mechanical Drawings

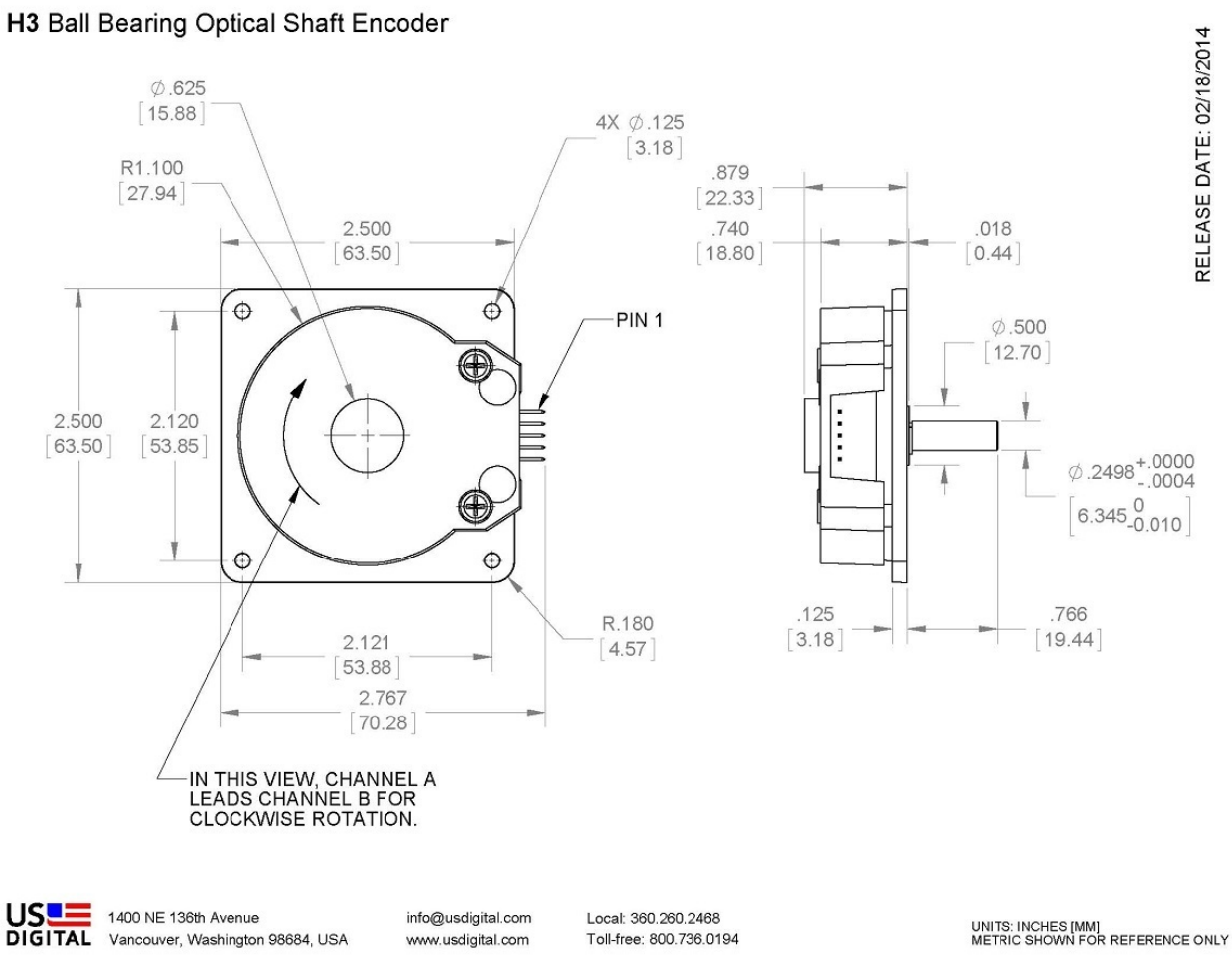

Specifications

ENVIRONMENTAL

PARAMETER	VALUE	UNITS
Operating Temperature, CPR < 2000	-40 to 100	C
Operating Temperature, CPR ≥ 2000	-25 to 100	C
Electrostatic Discharge, IEC 61000-4-2	± 4	kV
Vibration (10Hz to 2kHz, sinusoidal)	20	G
Shock (6 milliseconds, half-sine)	75	G

MECHANICAL

PARAMETER	VALUE
Max. Acceleration	100000 rad/sec²
Max. Shaft Speed (mechanical)	10000 RPM (1)
Max. Shaft Torque	0.05 in-oz
Max. Shaft Loading	2 lbs.
Bearing Life	life in millions of revs = $(90/P)^3$ where P = radial load in pounds.
Weight	2.69 oz.
Max. Shaft Runout	0.006 in. T.I.R.
Mounting Plate Screw Torque	(#2-56) 2-3
Moment of Inertia	0.001 oz-in-s²
Technical Bulletin TB1001 - Shaft and Bore Tolerances	Download *(https://www.usdigital.com/support/resources/reference/technical-docs/technical-bulletins/shaft-and-bore-tolerances-tb1001/)*

(1) The maximum speed due to electrical considerations is dependent on the CPR. See the EM1 *(https://www.usdigital.com/products/encoders/incremental/modules/em1/)* and EM2 *(https://www.usdigital.com/products/encoders/incremental/modules/em2/)* product pages.

PHASE RELATIONSHIP

B leads A for clockwise shaft rotation, and A leads B for counterclockwise rotation when viewed from the shaft side of the encoder.

ELECTRICAL

- Specifications apply over the entire operating temperature range.
- Typical values are specified at Vcc = 5.0Vdc and 25°C.
- For complete details, see the EM1 *(https://www.usdigital.com/products/encoders/incremental/modules/em1/)* and EM2 *(https://www.usdigital.com/products/encoders/incremental/modules/em2/)* product pages.

PARAMETER	MIN.	TYP.	MAX.	UNITS	CONDITIONS
Supply Voltage	4.5	5.0	5.5	V	
Supply Current		27	33	mA	CPR < 1000, no load
		54	62	mA	CPR ≥ 1000 and < 3600, no load
		72	85	mA	CPR ≥ 3600, no load
Low-level Output			0.5	V	I_{OL} = 8mA max., CPR < 3600
			0.5	mA	I_{OL} = 5mA max., CPR ≥ 3600
		0.05		mA	no load, CPR < 3600
		0.25		mA	no load, CPR ≥ 3600
High-level Output	2.0			V	I_{OH} = -8mA max., CPR < 3600
	2.0			V	I_{OH} = -5mA max., CPR ≥ 3600
		4.8		V	no load, CPR < 3600
		3.5		V	no load, CPR ≥ 3600
Output Current Per Channel	-8		8	mA	CPR < 3600
	-5		5	mA	CPR ≥ 3600
Output Rise Time		110		nS	CPR < 3600
		50		nS	CPR ≥ 3600
Output Fall Time		35		nS	CPR < 3600
		50		nS	CPR ≥ 3600

PIN-OUT

PIN	DESCRIPTION
1	Ground
2	Index
3	A channel
4	+5VDC power
5	B channel

Notes

- Cables and connectors are not included and must be ordered separately.
- US Digital® warrants its products against defects in materials and workmanship for two years. See complete warranty *(https://www.usdigital.com/company/warranty)* for details.

Configuration Options

H3	-	CPR	-	Index	-	Housing
		64		IE (*Index*)		D (*Default*)
		100		NE (*Non-Index*)		
		200				
		400				
		500				
		512				
		1000				
		1024				
		1800				
		2000				
		2048				
		2500				
		3600				
		4000				
		4096				
		5000				
		7200				
		8000				
		8192				
		10000				

PLEASE NOTE: This chart is for informational use only. Certain product configuration combinations are not available. Visit the H3 product page *(https://www.usdigital.com/products/H3)* for pricing and additional information.